ABESCO
MANUFACTURED HOME FOUNDATION PLAN

GENERAL NOTES

1. THIS FOUNDATION PLAN IS DESIGNED TO BE USED WITH ALL STANDARD CHASSIS MANUFACTURED HOME.

2. THIS PERMANENT FOUNDATION PLAN IS DESIGNED PER 1994 UNIFORM BUILDING CODE.
   DESIGN LOADS: * WIND LOAD 80 MPH EXPOSURE "C" * SEISMIC ZONE 4
   * FLOOR LIVE LOAD -- 40PSF * ROOF LIVE LOAD --20PSF
   --40PSF
   --80PSF

   THE DESIGN LOADS SHALL BE CONSISTANT WITH ROOF LIVE LOAD, WIND LOAD, AND SEISMIC ZONE AS ESTABLISHED FOR PERMANENT BUILDINGS WITHIN A SPECIFIC LOCAL AREA.

3. THIS FOUNDATION IS FOR PLACING MANUFACTURED HOMES CONSTRUCTED WITH LONGITUDINAL OR CROSS FLOOR JOISTS.

4. THIS FOUNDATION PLAN IS DESIGNED TO BE CONSTRUCTED ON A FAIRLY LEVEL SITE WITH NO EXISTING SOIL PROBLEMS.

5. FOUNDATION FOOTINGS FOR RIDGE BEAM SUPPORTS SHALL BE LOCATED AND SIZED FOR THE LOADS AS SHOWN IN THE MANUFACTURED HOME INSTALLATION INSTRUCTIONS.

6. IN AREAS WHERE DIFFERENTIAL SETTLEMENT (D.S.) CAN OCCUR, MANUFACTURED HOME SHALL BE READJUSTED WHEN (D.S.) EXCEEDS 1/4", OR WHEN IT ADVERSELY AFFECTS THE UNITS.

7. CARRY ALL FOOTINGS DOWN TO FIRM, UNDISTURBED SOIL. FOOTINGS SHALL EXTEND BELOW PREVAILING FROST LINE WHERE REQUIRED BY LOCAL AND STATE ORDINANCES AND CODES. FOOTINGS ARE DESIGNED FOR 1,000 PSF TOTAL SOIL BEARING PRESSURE AND SHALL BE COMPATIBLE WITH LOCAL SOIL CONDITIONS.
   * CONCRETE = 2,000 PSI @ 28 DAYS.

8. * STRUCTURAL STEEL * FABRICATE ACCORDING TO 1986 AISC SPECS. * WELD ACCORDING TO 1990 AWS SPECS. * ELECTRODES E70 * PLATES ASTM A36 * ANCHOR BOLTS ASTM A307 * BOLTS SAE GR.5 ASTM A449, ASTM A325 * #12 SMS TO BE 12-24 x 7/8" HEX HEAD TEKS/4 BY BUILDEX OR EQUIV.

9. STANCHION SHALL BE COATED WITH RUST RESISTANT ENGARD 703 OR EQUIVALENT, AND BE LISTED AND LABELED BY TESTING ENGINEERS INC. FOR THE FOLLOWING LOADS:
   * VERTICAL = 5,000 LBS. MAX.
   * LATERAL MAJOR AXIS = 800 LBS. MAX.
   * LATERIAL MINOR AXIS = 450 LBS. MAX.

10. UNDER FLOOR VENTILATION OPENINGS IN EXTERIOR PERIMETER ENCLOSURE WALLS SHALL BE NOT LESS THAN ONE SQUARE FOOT FOR EACH 150 SQUARE FOOT OF FLOOR AREA.

11. NOTICE TO CONTRACTORS: IT IS THE FOUNDATION CONTRACTORS RESPONSIBILITY TO VERIFY DIMENSIONS I.E. ACTUAL WIDTH AND LENGTH OF UNIT, CHASSIS SPACING AND RIDGE BEAM SUPPORT LOCATIONS WHERE APPLICABLE BEFORE CONSTRUCTING FOUNDATION.

ENGINEER APPROVAL	STATE APPROVAL
REGISTERED PROFESSIONAL ENGINEER DAVID A. PRAY No. 19010 Exp. 6/30/07 CIVIL STATE OF CALIFORNIA 5/23/06	MANUFACTURED HOME/MOBILE HOME FOUNDATION SYSTEM HEALTH AND SAFETY CODE, SECTION 18551 APPROVED SUBJECT TO CORRECTIONS NOTED APPROVAL DOES NOT AUTHORIZE OR APPROVE ANY OMISSIONS OR DEVIATION FROM REQUIREMENTS OF APPLICABLE STATE LAWS AND REGULATIONS State of California Department of Housing and Community Development DIVISION OF CODES AND STANDARDS BY _____ DATE 5/26/06 (signature) SPA NO. 27-HF This Plan Approval Expires 3/19/08

ABESCO FOUNDATION DWG. 1 of 5"

PACIFIC CONSULTING ENGINEERS
2150 BELL AVE. SUITE 145
SAC. CA. 95838 PH: 916-564-6028

ABESCO
5851 FLORIN-PERKINS ROAD
SAC. CA. 95828 PH: 916-383-8831

CHASSIS SUPPORT DETAIL (MOBILE UP)

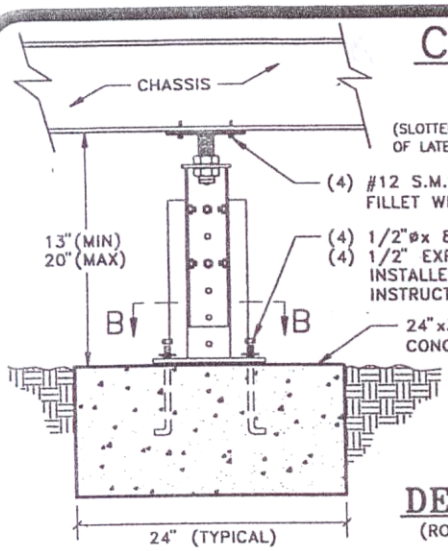

NOTE: SEE PAGE #4 FOR FOOTING SIZES WHEN FOOTING EXTENDER IS USED

DETAIL 1
(ROTATED 90°)

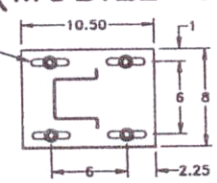

SECTION B–B

FRAME STIFFNER DETAIL

ALTERNATIVE: (2) #12 S.M.S. OR WELD

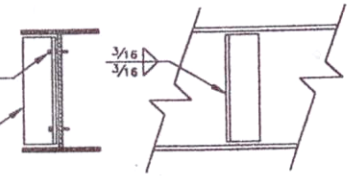

NOTE: USE STIFFNER IF OUTRIGGER OR CROSS MEMBER DO NOT OCCUR WITHIN 12" OF STANCHION (TYP)

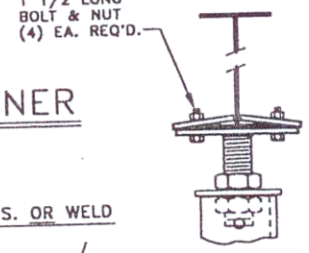

ALTERNATIVE BOLT-ON TOP

RIDGE BEAM SUPPORT DETAIL

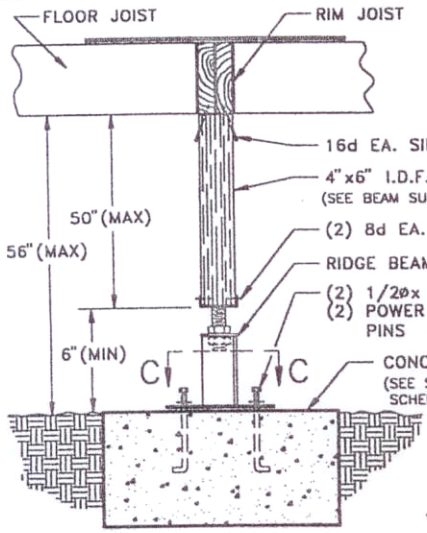

DETAIL 2

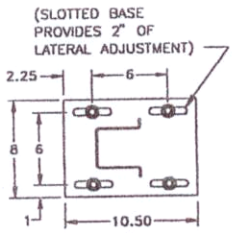

SECTION C–C

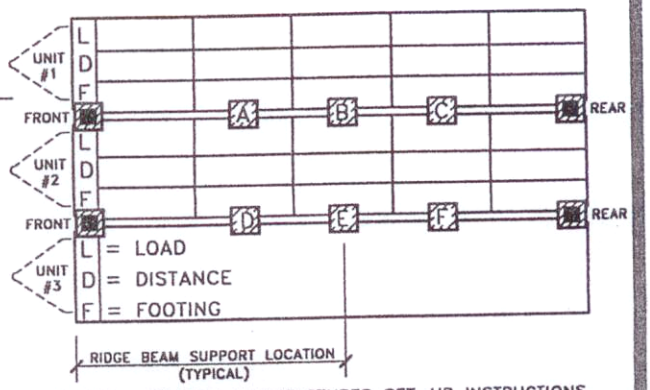

NOTE: CONSULT MANUFACTURES SET-UP INSTRUCTIONS FOR RIDGE BEAM LOADS AND LOCATIONS. (SEE NOTE #5 OF GENERAL NOTES)

BEAM SUPPORT SCHEDULE

(MAXIMUM LOAD PER RIDGE BEAM SUPPORT)

ABESCO MODEL NUMBER	NUMBER OF POSTS	MAXIMUM LOAD (lbs)
104	1	6000
105	2	12000

NOTE:
(a) ALL POSTS TO BE 4"x6" #3H.F. OR BETTER
(b) IF LOAD EXCEEDS 12000 LB.--THEN USE A COMBINATION OF MODELS #104 AND #105

SUPPORT FOOTING SCHEDULE

(RIDGE BEAM SUPPORT FOOTING)

LOAD TO FOOTING (lbs)	FOOTING SIZE ("x "x12"dp)	LOAD TO FOOTING (lbs)	FOOTING SIZE ("x "x12"dp)	LOAD TO FOOTING (lbs)	FOOTING SIZE ("x "x12"dp)
1000	12"x12"	7000	32"x32"	13000	44"x44
2000	17"x17"	8000	34"x34"	14000	45"x45"
3000	21"x21"	9000	36"x36"	15000	47"x47"
4000	24"x24"	10000	38"x38"	16000	48"x48"
5000	27"x27"	11000	40"x40"	17000	50"x50"
6000	30"x30"	12000	42"x42"	18000	51"x51"

NOTE:
(a) IF FOOTING SIZE IS 36"x36"x12" OR BIGGER USE (3)-#4 REBAR E.W.
(b) IF FOOTING SIZE IS 48"x48"x12" OR BIGGER USE (4)-#4 REBAR E.W.

INTERMEDIATE CHASSIS SUPPORTS

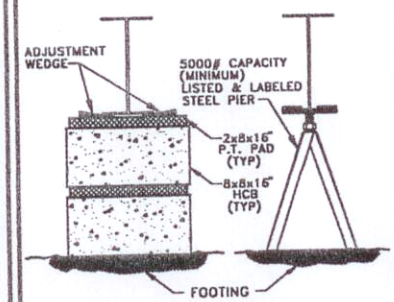

INTERMEDIATE SUPPORT TYPES

DETAIL 3

③ INTERMEDIATE CHASSIS SUPPORT

CONC. FTG.
5,000 LB. CAPACITY (MIN) STEEL PIER OR 8"x8"x16" HCB BLOCK ON 24"x30" CONCRETE FOOTING (SEE NOTE #7 OF GENERAL NOTES)

P.T. PAD
OR (2) 2"x12"x30" P.T. PAD WITH 2"x12"x24" P.T. CROSS PAD

ABESCO BRG. PAD
OR ON ABESCO's BEARING PAD's ARRANGED TO PROVIDE 4,753 LB. CAPACITY. (3 PAD CONFIGURATION FROM SPA 250-1)

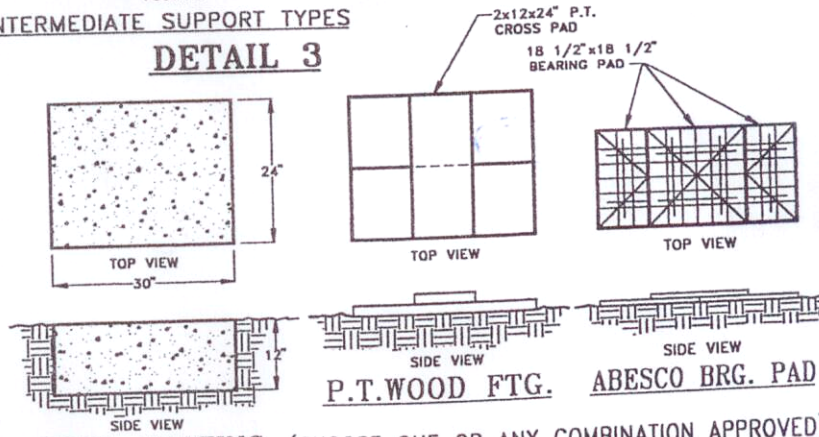

P.T.WOOD FTG. ABESCO BRG. PAD

CONC. FOOTING (CHOOSE ONE OR ANY COMBINATION APPROVED)

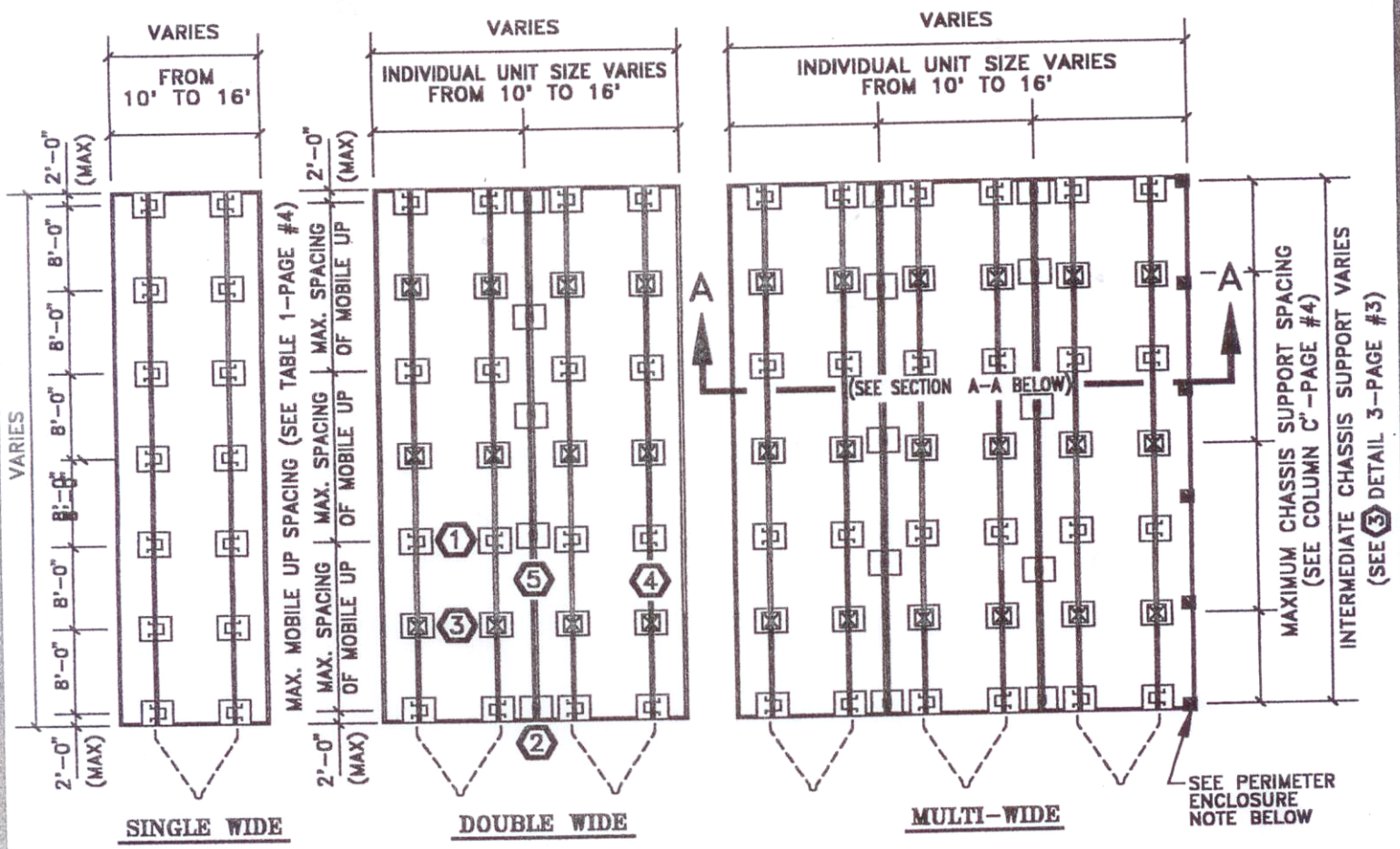

FOUNDATION PLAN

CHASSIS SUPPORT SCHEDULE

1 TYP. CHASSIS SUPPORT FTG.

24" x 30" x 12" DEEP POURED IN PLACE CONCRETE FOOTING.

24" 30"

SEE NOTE #7 OF GENERAL NOTES

2 TYP. RIDGE BEAM SUPPORT

NOTE:
CONSULT MANUFACTURES SET-UP INSTRUCTIONS FOR RIDGE BEAM LOADS AND LOCATIONS.

SEE DETAIL 2 FOR SPECIFICATIONS

3 INTERMEDIATE CHASSIS SUPPORT

SEE DETAIL 3-PAGE #3 FOR VARIOUS TYPES OF FOOTINGS

SEE DETAIL 3 FOR SUPPORT SPECS.

4 TYPICAL CHASSIS FRAME

5 TYPICAL MARRIAGE LINE

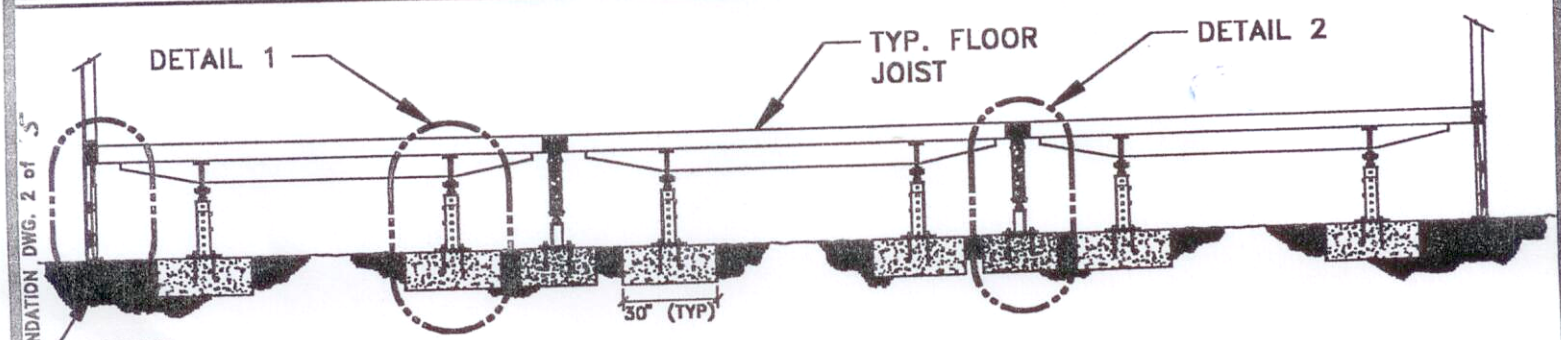

NOTE:
PERIMETER ENCLOSURE PER ATTACHMENT #1 OR HOME MANUFACTURES RECOMMENDATIONS.

SECTION A-A

H C D

ABESCO FOUNDATION DWG. 2 of 3

TABLE 1: CHASSIS SUPPORT SPACING--MOBILE UPS AND INTERMEDIATE

		20 PSF -- Roof Live/Snow Load						40 PSF -- Roof Snow Load						80 PSF -- Roof Snow Load					
		Column 'A'				Column 'B'	Column 'C'	Column 'A'				Column 'B'	Column 'C'	Column 'A'				Column 'B'	Column 'C'
No. of units in Home	Widest unit in Home	Minimum No. of Mobile Ups per Chassis Beam				Maximum Spacing of Mobile Ups	Maximum Spacing of Chassis Supports	Minimum No. of Mobile Ups per Chassis Beam				Maximum Spacing of Mobile Ups	Maximum Spacing of Chassis Supports	Minimum No. of Mobile Ups per Chassis Beam				Maximum Spacing of Mobile Ups	Maximum Spacing of Chassis Supports
		36'	48'	60'	66'			42'	48'	60'	66'			42'	56'	60'	66'		
1	8'/10'	3	3	3	4	8'-0"	N/A	3	4	4	5	8'-0"	N/A	4	5	6	6	8'-0"	N/A
	12'	3	3	3	4	8'-0"	N/A	3	4	4	5	8'-0"	N/A	4	5	6	6	8'-0"	N/A
	14'	3	3	3	4	8'-0"	N/A	3	4	4	5	8'-0"	N/A	4	5	6	6	8'-0"	N/A
	16'	3	3	3	4	7'-0"	N/A	3	4	4	5	7'-0"	N/A	4	5	6	6	7'-0"	N/A
2	8'/10'	3	3	3	4	10'-10"	8'-2"	3	4	4	5	10'-10"	8'-2"	4	5	6	6	10'-10"	8'-2"
	12'	3	3	3	4	10'-10"	8'-2"	3	4	4	5	10'-10"	8'-2"	4	5	6	6	10'-10"	8'-2"
	14'	3	3	3	4	10'-10"	8'-2"	3	4	4	5	10'-10"	8'-2"	4	5	6	6	10'-10"	8'-2"
	16'	3	3	3	4	10'-10"	8'-2"	3	4	4	5	10'-10"	8'-2"	4	5	6	6	10'-10"	8'-2"
3	8'/10'	3	3	3	4	16'-3"	8'-2"	3	4	4	5	16'-3"	8'-2"	4	5	6	6	16'-3"	8'-2"
	12'	3	3	3	4	16'-3"	8'-2"	3	4	4	5	16'-3"	8'-2"	4	5	6	6	16'-3"	8'-2"
	14'	3	3	3	4	16'-3"	8'-2"	3	4	4	5	16'-3"	8'-2"	4	5	6	6	14'-3"	8'-2"
	16'	3	3	3	4	16'-3"	8'-2"	3	4	4	5	16'-3"	8'-2"	4	5	6	6	12'-6"	8'-2"

NOTES:

1. Column 'A' -- "Minimum No. of Mobile-Ups per Chassis Beam" -- This column shows the minimum number of Mobile-Ups per chassis beam based on the length of the unit. They shall never be spaced farther apart than the dimension shown in Column 'B'. This column is based on lateral loads parallel to the chassis beams of the units.

2. Column 'B' -- "Maximum Spacing of Mobile-Ups" -- This column shows the maximum spacing of Mobile-Ups. This maximum spacing will, on ocasion, require more Mobile-Ups than the minimum number shown in Column 'A' -- "Minimum No. of Mobile-Ups per Chassis Beam". This spacing is based on loads perpendicular to the chassis beams of the unit. If the maximum spacing of the Mobile-Ups is greater than the maximum spacing of the chassis supports as shown in Column 'C', then intermediate chassis supports must be placed between the Mobile-Ups, or the Mobile-Ups must be spaced as shown in Column 'C' -- "Maximum Spacing of Chassis Supports".

3. Column 'C' -- "Maximum Spacing of Chassis Supports" -- This column shows the maximum spacing that the chassis beam can be supported. The support may be a Mobile-Up or an other type of support (steel pier of concrete block) and footing that has a vertical working load capacity of 5,000 lbs. This column does not change the minimum number nor the maximum spacing of the Mobile-Ups as shown in Columns 'A' & 'B'. If the maximum spacing of the Mobile-Ups is less than the maximum spacing of the chassis supports then no additional chassis supports are required between the Mobile-Ups.

EXAMPLE:
Home is a 24' X 60' Double Wide in a 40 PSF Roof Live Load area.
From Column 'A' under 40 PSF Roof Load - min. No. of Mobile-Ups per chassis beam = 4.
From Column 'B' under 40 PSF Roof Load - maximum spacing of Mobile-Ups = 10'-10".
- Check No. of Mobile-Ups required = (60'-2'-2') ÷ 10.833'+1=6.16=D Round up to 7 per chassis
- Spacing = (60'-2'-2') ÷7=8 <8'-2" (from Column 'C'). Thus, because Mobile-Ups are spaced at less than 8'-2" then no intermediate chassis supports are required.

FOOTING EXTENDER

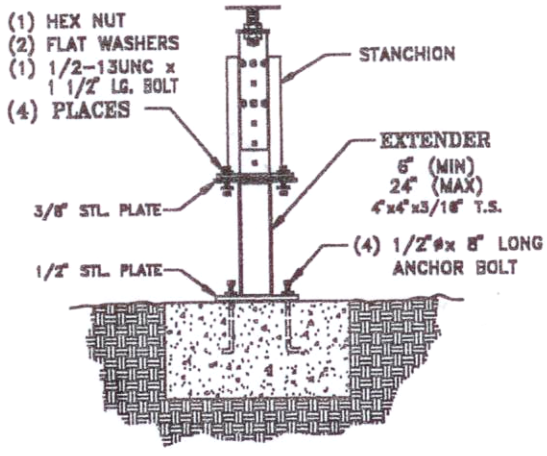

IF DISTANCE FROM BOTTOM OF CHASSIS TO TOP OF FOOTING IS:

		REQ'D. FTG. SIZE
24" MAX	--	24"x 30"x 12" DEEP
32" MAX	--	24"x 36"x 12" DEEP
36" MAX	--	30"x 36"x 12" DEEP
44" MAX	--	36" x 42" x 12" DEEP